Diary

23-24th October Ouston	SMAE 2nd Trials for 1983 World Championships teams F1A; F1B; F1C. Contact P Farrimond, tel : 0942 34068
14th November Watton	East Englian Wakefield Meeting. Pre'51 rules; '51 - '54 rules; F1B. Contact A R Wells, tel : Hornchurch 40859.
21st November North Luffenham	SMAE experimental free flight event, O/G; O/R; O/P. Contact P Farrimond, tel : 0942 34068.
5th December Henlow	Aeromodeller Coupe d'Hiver International. F1G and 100g. Prior notification required for admission at the gate. Contact : Aeromodeller, tel : 0442 41221.
12th December Wigan C of Tech	Wigan Indoor meeting. EZB, HLG, Keyhole scale. Contact D Yates , tel : 0942 214725
13th February 1983 Wigan C of Tech	Wigan Indoor meeting. Details as for Dec 12th.

OCTOBER 1982 82/10

FFn

FREE FLIGHT NEWS

Contents

1982 World Indoor Championships	74
Noticeboard	77
FFn	77
SMAE 5th and 6th Area Centralised Results	77
a2-16 and a2-18, F1A by Fabio Pontanari	78

A subscription renewal form is included with this issue

8 Blenheim Court, Farnborough, Hants, England GU14 7DS

Compiled and published by Ian Kaynes, Paul Masterman. Malcolm Wood.

1982 INDOOR WORLD CHAMPIONSHIPS

Report by Ian Kaynes

The 1982 Championships were held in the salt mine at Slanic Prahova, Romania, from September 22nd to 26th. Although Romania has hosted a number of Indoor Internationals and the 1970 World Champs at Slanic, there was a certain feeling of stepping into the unknown as I set out for Slanic. Little information had been sent to participants and a representative was not sent to the CIAM meetings to report on plans. Some communication had been possible when Paul Masterman was able to meet the organisers during a business trip to Romania in the summer.

My doubts were dispelled on arrival at Bucharest Otopeni international airport, where there was a large banner above the terminal welcoming the World Champs participants. Officials were helping aeromodellers through the formalities of immigration - completely bypassing them in my case - but, unfortunately, the baggage handlers had not been alerted to the special needs of indoor model boxes. Erv Rodemsky's box had been unloaded on to the regular conveyor and, being so large, it stuck. The box and models were badly damaged, not that it was a weak box because it had stalled the conveyor.

Tell someone that you are going to the salt mines in Romania to fly models and there is a reaction of disbelieve. When you actually enter the mines a similar feeling hits you. After travelling down in an old primitive lift, you enter vast caverns which are most reminiscent of the interior of a cathedral. More surprising still is that the mines extend to a number of levels with more than a score of immense galleries, connected by equally large "corridors". The nearly pure salt is reassuringly hard to touch and its dirty white or grey colour is similar to dirty snow and ice. Although not slippery, it does feel icy cold after spending a day in the constant 9°C temperature of the "salina". There have been mines at Slanic since the 17th century, when they were worked by convicts. 'Our' mine dated from early this century and when closed in 1971 it had been producing 600 000 tons of salt per year.

13 countries were represented at these Championships, notable absentees being the Czechs of whom Juri Kalina is an expert at flying in the mine. Practice had been possible before the official starting date but in a different gallery of the salina. Thus the time allocated for practice in the actual contest site was most valuable but very short, scheduled in part of the first day before the opening ceremony. A number of team managers voiced there objections at a meeting that evening and, after almost no discussion, the organisers agreed to extend the contest to three days of two rounds each. Practice could then take place in the morning of the first two days. This amazing flexibility satisfied almost everyone, with some inconvenience for Bernard Hunt who had intended to leave early on the Saturday which had now become the third contest day.

The practice sessions produced some very promising times - well over 30 minutes - for quite a few competitors, including the entire British team. A whistle indicated the prompt start of the first contest round. A Japanese model was first airborne, soon followed by the defending champion Erv Rodemsky with a rapid climb up the centre of the mine. The climb was well-judged in that it went well into the roof area without getting into danger at the sides. The cross-section of the mine was shown in Bernard Aslett's article in the June 1982 FFn. Erv's model came down rapidly at the end when it had used all of its 1875 turns and watches showed a fine start at 34.10.

Meanwhile, Laurie Barr had launched but suffered a stall when the model seemed to have settled into its climb pattern. A tail slide allowed Laurie to catch it at 59 seconds. Dave Pymm was next to fly for GB and made good altitide, but suffered from some drift to land almost inside the processing area at 31.49. Laurie's repeat flight got away safely, with the same model being flown after patching its damaged tailplane. The climb was right up the middle and got to within 5m of the catwalks on the ceiling on the way to a final time of 33.27. Bernard Hunt was well set to repeat his 30+ practice flights when the model hung high up the wall. This was one of many models that were skilfully retrieved by the Barr balloon handling expertise. The salt had been extracted from the mines by excavating the entire floor in 2.5m layers, giving some ridges around the wall at this pitch which could easily catch models sliding past.

Rene Butty had a low-climbing flight of 27 minutes which team-mate Dieter Siebenmann could not approach. The Swiss were flying their usual style models, not wanting to change layout just to suit this unique site. Possible the most noteworthy technical innovation seen at the event was their motor stick construction. Boron fibres running lengthwise at four points round the tube were used in place of external bracing. The tube was reinforced by cruciform style internal spacers at intervals along the length. Although adequate in normal flying conditions, an external bracing wire had been added to help carry the extra high power motors needed in order to climb in the cold air at Slanic.

The USA team were likewise flying their usual styles of models, with typically large wing chords. Cezar Banks was just under the half-hour on a low flight and Jim Richmond scored 31.34. The Romanian models were also nationally distinctive with elliptical planforms and very steady high climbs in 'their' mine. An impressive flight by Aurel Popa suffered from the increasing drift, hit the sloping part of the upper wall, slid down, fell clear and even then went on to a time of 29.45. His fellow team member Aurel Morar kept clear of trouble and scored 33.04.

After a half hour break round 2 started with the atmosphere still turbulent. Popa had another collision interupted flight; Pymm was one of several to have models hit the wall and hang up. The Japanese showed that it was possible to stay clear and Yamazaki particularly flirted with the catwalk on his 29.40 flight. Barr ran off too many turns from an apparently strong motor and the model didn't climb very high. Hunt climbed quickly in a wide turn initially, but soon cruised around at medium height for 28.15. Bottom score of the round was the 15 seconds for Ray Harlan. His number one model had blown up on launch and on the second attempt his number two tucked under and the prop hit the wing.

Overnight the weather outdoors became a little warmer and more stable with high pressure. The possibility was discussed that this might help to calm conditions underground. At first it did seem good, with Barr again beating the half-hour and Popa running off all the turns on a flight of 32.47, but the troubles soon returned. Pymm and Rodemsky ended promising flights by drifting into the sides. There were other problems arising from the high power the models had to withstand at launch time. Cezar Banks, who was using a high pitch of

around 40° on his props, stalled in after the crucial first minute and Jack McGillivray had his model literally explode at a height of 8m when the variable pitch prop went off correct alignement. He used low pitch initially to give a fast climb up the mine and this changed to a higher pitch later for a slow efficient cruise and descent.

The following round saw further deterioration in the meteorological conditions. Dave Pymm's wide circling model was once again caught on the wall to frustrate his continuing search for a decent score to add to his first round time. Also looking for a second good score, Rodemsky continued his troubles. This time he broke the boom when getting into position to launch; his model stock had been really reduced by his problems at the airport combined with hang-ups and damaging one model by accidentally spraying it with cement. His next try took off impressively under a 2g motor and neared the ceiling. It went round bouncing off the roof and for three circuits was briefly disappearing from view each time it passed over the catwalk, until next time, inevitably, it failed to reappear. Aurel Popa made the long climb up to the catwalk to retrieve it for Erv. Another American was also having prolonged troubles - Ray Harlan had his wing fold on the climb. Ray had been persuaded to move the wing back a little to try to find more performance.

Dieter Siebenmann had improved his standard models' potential in the mine by cutting the prop to a smaller diameter, but in round 4 his best aircraft ended on the wall. This was one which Laurie was unable to free and Dieter was thus down to his last model. Bernard Hunt's flight drifted towards the wall at the end of gallery and needed a long steer to get the model back to the centre of the salina. This later produced some unfounded comments about illegal height gain from the timekeepers, apparently not used to watching such long steering. The conditions were smoothing out towards the end of the round and Jim Richmond made a superbly judged flight to set the new top time at 36.37. Jim had been keen to return to Slanic - having met his wife as an interpreter at the previous (1970) World Champs there - and was flying the design that he had used at West Baden in 1980 with a new positive flare propeller. For the good flight in round 4 he had tweaked it to slightly lower pitch. Laurie Barr, who had changed models because of the rough air earlier in the round, launched in the same position as Jim and also found smooth conditions to improve his total with a 32.03.

The end of Friday's flying had Jim Richmond (68.11 total of best two) leading Laurie Barr (65.30) and Cezar Banks (62.53), while the team placings were USA first with 177.17, Romania second (172.01) and Great Britain third (164.56). These team scores could easily be changed if some flyers could put in a second flight to match their demonstrated potential performance. Moreover, the morning practice sessions had very good stable air and, if this also held for round 5 on Saturday morning, the whole contest could change dramatically.

British team strategy was obviously to have Dave Pymm try for a good flight in the best conditions, so he flew first. A safe and fast climb took the model high and it centred nicely under the catwalk by the 10 minute stage. Light drift took the descent just a few feet sideways, but still easily clear of the walls. The prop had almost stopped as the model came down over the Canadian team preparing for a flight and landed at 35.39, taking Dave to second place.

Banks broke lots of motors and damaged his model, then Richmond flew for the USA team but didn't climb far. Drift took the model to the wall, from where it was later plucked with a crossbar carried below a balloon. Barr's aeroplane dived after launching before it also had the same problem of not making enough altitude, despite the work that Laurie had done on motors the previous evening. During cruise it drifted towards the side and Laurie missed the contact with the balloon string, so that the flight ended on the salt face. After having many problems Ron Higgs of Canada had spent his overnight time in building a nearly completely new model and was rewarded by a flight of 19 minutes in this round.

Meanwhile, Korar had launched at the entrance end of the main flying gallery and took good advantage of the extra room available there at high altitude. His model reached the ceiling at 14.30 and for the next five minutes scrubbed the ceiling gently without getting pushed into trouble. A slow descent then gave complete safety in the wider part of the mine with no apparent drift to spoil the flight. Still high up at 30 minutes this was obviously going to make a crucial time. The good combination of rubber size, turns and prop was running off the very last turns as the model landed to applause for a new lead time of 36.56.

Other good flights were now being recorded, with Rene Butty and Edward Ciapala making good by cracking the 31 minute mark. Shorter flights represented personal improvements for Jack McGillivray with his VP prop working fine and for Otto Rodenburg from the Netherlands. Otto had interesting tail bracing on his model - it was normally slack but tightened and limited distortion under the high power used during the initial climb. Handling this high power was one of the unique problems of flying in the cold atmosphere of the salina. Yamazaki was trying hard by climbing to the roof, but the model hit and stuck to one of the ceiling lights on the catwalk. Soon afterwards a bang was heard as the motor broke in the heat and the model stayed there in silhouette like a moth on the light. When retrieved from the catwalk the Romanian comment shouted down sounded like "there's no number on it ! ".

The American representatives weren't enjoying the round : Banks and Richmond posted times in the low twenties, Harlan a zero after taking two attempts and breaking models, Rodemsky broke his boom on the wall after rocketing up to the catwalk in just 7 minutes on a thinner and lighter (1.5g) motor than he had used previously. This came after Erv had broken his torque meter and three motors, with lubricant spraying over his best model and leaving the wing film perforated.

Popa had saved his best model for the anticipated good conditions today but it hit the sloping upper walls. He had said that conditions may have been better in March, when it was colder outside, but it was now certain that the main drift problem resulted from the number of people in the mine. Today the difficulties had started during the morning, although this had been a calm time during the less populated practice sessions on previous days. The duration lost due to the conditions was demonstrated by the third Romanian to fly in round 5. During the team's one week training period before the Champs, with just five people in the mine, Micu Bezman had regularly cleared 35 minutes on 2000 turns. Now he didn't reach 25 minutes despite 100 extra turns. In practice Popa had flown 34 minutes on low power and had then built two stronger booms to allow him to fly on higher torque without the boom bending; this would allow better penetration through the rough atmosphere that he had expected at the Championships. His motors were around the 1.25g weight.

Bernard Hunt had only managed to equal his second best time of 28.15, but the round closed with GB the leading team just 46 seconds ahead of the home side. Individually, Morar was now leading Richmond, Pymm and Barr.

There was almost a rush to fly in the calm air at the start of round 6 - if indoor modellers can be said to rush - and soon some promising flights were up. Popa drifted towards the side but was safely down at 32.17, while Hunt needed a high altitude steer during his flight of 29.57. The effect on team scores was dramatic : Romania had taken the lead by a mere 4 seconds ! Ray Harlan's model stalled after launch so he caught it and relaunched safely, but it didn't get high and ended any possibility for USA to improve above third team place. Compatriot in trouble Erv Rodemsky had to relinquish his World Champion title by again hanging on the wall.

The next Romanian airborne was Nicu Bezman flying from the entrance area. It climbed well until it started bouncing off the upper slopes of the wall. This continued for four circuits without an upset then the model drifted away into clear airspace. The pattern was good and showed great stability in the rough air, until the aircraft dropped exhausted for the last feet of the 31.39 flight. Since his second best score had previously been only 27.04 this gave the team a secure lead of 4.39. Laurie Barr could pull back some of this if he could improve on his 32.03 flight, but, really going for broke, his first attempt had the prop damaged while the second try stalled down. Morar couldn't pull further ahead since his flight caught on the wall.

Just a quarter of an hour before the close Dave Pymm launched. A smooth climb took the aeroplane to an altitude comfortably below the roof. It promised sufficient time to improve Dave's placing - he needed 34.22 to win - but Jim Richmond could also beat Morar if he flew for 33.23. Jim had amazingly blown six motors during his slow calculated windings and finally had an intact wound motor but without enough time to load it before the closing whistle was blown. All eyes were now concentrated on Dave's flight. There were some close shaves on the upper sloping walls then the descent started. Although the sloping walls now gave it more space the model's turning circle was also growing wider, so much so that before 20 minutes was reached the model made three close passes of the wall. Kindly the drift then blew the circle away from danger. 32 minutes were passed with the model gently letting down through the 8 metre level and then chairs were moved from the floor in preparation for the landing. Another minute had passed when, at about 4 metre altitude a slight stall accelerated the descent. The turns were almost gone as everyone applauded the model on touch down, but the congratulations were taking place in the Romanian group - Dave had been just 12 seconds short of becoming World Champion. What a climax on the last flight !

Since the organisers had agreed to extend the flying to three days, their social programme that Saturday was curtailed. The planned meeting with the Mayor of Slanic had been transformed into a drinks and chat session with the team managers and jury on Friday evening. The prize award ceremony was outdoors near the mine. The FAI trophies and local vases - including some turned from Slanic salt - were presented to the background of lightning in a dark sky. My speech as president of the FAI jury was rapidly curtailed as the rain began. The girl carrying the banner for the English team started to walk out but was called back to wait for the mayor's speech - given a rapid

simultaneous translation as the rain came down more heavily. The banner bearing girl was again sent back, this time to wait for the march to be played, before everyone could make the quick dash to the shelter of the coaches. These took us to the banquet. For the second time in one month, a Championships banquet was ruined by a grossly over-loud band playing national music at us. Organisers must realise that this is when we want to TALK to one another. None of the requests were successful in reducing the volume of the performance, apparently being made for the benefit of the band and possibly also for the officials.

Most of the team from UK spent two and a half days in the pleasant capital city of Bucharest before returning home. It came as quite a surprise to find a city and atmosphere not dissimilar to Paris. I received remarkable VIP treatment as president of the FAI jury. An official car was available for sightseeing, one highlight of which was a visit to a peasant's home. The driver and interpreter stopped my car at an apparently random selection of house and, together with Bob Bailey and Mike Collings along for the ride, the owners showed us around their immaculate home and garden and gave us many glasses of their home-distilled tuica (plum brandy). Also notable was a meeting with the minister for sport - who fully accepted aeromodelling as a full sport and was well informed on the details and results of the Championships, for which there had been special state aid. The special guest status continued for the departure from Bucharest Otopeni airport, when the British party were taken to the aircraft in a special coach and given the best seats, to complete a really memorable visit to Romania.

PS Please excuse the travelogue aspects of the report. I can assure you that these would have been a hundred times longer if I was actually talking to you instead of writing it down in valuable space of the FFn columns !

Results

									Total
1	A Morar	ROM	33.04	20.57	24.17	0.14	36.56	18.32	70.00
2	D Pymm	GB	31.49	9.06	1.55	8.06	35.39	34.10	69.49
3	J Richmond	USA	31.34	27.39	29.55	36.37	22.08	0	68.11
4	L Barr	GB	33.27	29.51	31.29	32.03	18.28	0.33	65.30
5	A Popa	ROM	29.45	26.44	32.47	15.32	9.53	32.17	65.04
6	C Banks	USA	29.54	28.45	1.25	32.59	23.45	28.51	62.53
7	N Bezman	ROM	24.54	18.14	27.04	31.07	24.49	31.39	62.46
8	A Ree	H	26.10	31.10	27.22	0	30.15	0	61.25
9	D Siebenmann	CH	14.34	22.01	28.01	11.13	23.42	33.18	61.19
10	T Yamazaki	J	29.15	29.40	6.33	31.38	19.45	15.45	61.16
11	S Kujawa	PL	29.21	26.53	29.40	23.24	10.39	30.50	60.30
12	R Butty	CH	27.33	0.28	16.44	28.58	31.17	28.13	60.15
13	B Hunt	GB	14.09	28.15	30.16	26.38	28.15	29.57	60.13
14	E Ciapala	PL	27.22	23.03	14.32	22.20	31.09	13.50	58.31
15	Y Bamba	J	22.51	27.47	16.57	26.35	27.57	14.40	55.44
16	K Vogler	FRG	20.55	21.32	15.27	0.08	28.44	26.23	55.07
17	R Lovric	YU	21.03	25.36	24.10	20.40	29.10	24.19	54.46
18	S Sierko	PL	25.07	22.36	28.18	21.38	20.52	26.24	54.42
19	P Nore	FN	25.44	14.42	28.28	0	24.10	22.30	54.12
20	L Englund	FN	14.50	1.50	15.36	28.12	22.06	24.48	53.00
21	J McGillivray	CDN	7.22	24.15	23.20	16.25	27.15	10.25	51.30
22	O Velunsek	YU	13.57	21.48	25.16	22.27	25.55	23.21	51.11

23	O Rodenburg	NL	13.49	16.42	24.10	23.14	26.55	23.12	51.05
	C Wolthoorn	NL	25.36	11.58	25.29	0.22	23.57	21.36	51.05
25	E Rodemsky WC/	USA	34.10	2.55	16.06	12.18	9.40	7.47	50.16
26	C Schueler	CDN	14.43	13.30	19.54	24.38	18.17	23.08	47.40
27	G de Angelini	I	17.48	27.06	18.33	13.48	20.20	13.55	47.26
28	A Egri	H	21.05	19.30	14.40	25.41	12.47	17.42	46.46
29	H Enomoto	J	18.31	25.37	21.04	18.16	17.11	13.45	46.41
30	A Klinck	FRG	18.03	22.47	22.58	23.29	0	0	46.27
31	R Harlan	USA	24.44	0.15	21.29	4.00	0	15.13	46.13
32	G Masciullo	I	20.49	19.02	0	11.27	13.06	24.55	45.44
33	C Cotugio	I	22.30	22.22	21.46	23.04	20.01	19.21	45.34
34	H Jakob	FRG	8.58	19.55	15.28	25.20	15.10	15.24	45.15
35	V Kmoch	YU	20.58	0.42	22.43	0.26	14.02	18.37	43.41
36	R Higgs	CDN	0	9.10	12.08	0	19.03	24.26	43.29
37	D Orsovai	H	19.00	17.59	0	21.01	17.34	0	40.01
38	H Erofejeff	FN	18.17	12.09	15.14	21.00	5.36	16.37	39.17
39	W Beekmeyer	NL	18.30	16.36	16.10	11.35	6.51	17.30	36.00

Team Results

1	Romania	197.50	8	West Germany	146.49
2	United Kingdom	195.32	9	Finland	146.29
3	Unites States	177.17	10	Canada	139.31
4	Poland	173.43	11	Italy	138.44
5	Japan	163.43	12	Netherlands	138.10
6	Yugoslavia	149.38	13	Switzerland (2 flyers)	121.34
7	Hungary	148.12			

NOTICEBOARD

PTFE Tubing : In addition to the soft soap, about which we reminded you in the August issue (£1 per jar collected at contests), John O'Donnell is able to supply PTFE in three different sizes. The details are :
PTFE of approximately 0.050" inside diameter, suitable for auto lines;
PTFE " 0.030" " , suitable for cyno' tubes;
"Symel" flexible tubing of 0.5mm i.d. , this one being open to your own ideas of applications - John suggests the possibility of sleeving for peanut prop shafts. These are all available at a price of 50p for 4 yards/metres and can be posted if you include an SAE. Contact John at 36 Marina Drive, Marple, Stockport, Cheshire SK6 6JL.

Woodhouse supplies : Michael advises us that he has needed to increase the price of some of his items since the Noticeboard list in the March 1982 FFn. Tissue costs are now 15p per sheet for Lite, 30p per sheet of Medium, 33p per sheet of Super. Please add 35p for postage on orders below £2. As a sweetener the colour range of red, yellow, blue, orange, green and white is now extended to include BLACK !
Pirelli rubber costs are £13.50 + 85p postage for 550 gm of 6 x 1 mm,
£8.00 + 60p for 330 gm of 5 x 1 mm,
£5.00 + 60p for 200 gm of 3 x 1 mm.
The Wakefield prop unit now costs £17.50 post free. Spare spinners still cost 99p each post free.
Further details and orders to Michael Woodhouse at 12 Marston Lane, Eaton, Norwich, Norfolk NR4 6LZ.

FFN

Attached to this issue is a subscription renewal form for 1983. We hope that all our readers will continue to support us in the new year and we ask you to return the form promptly. You will then receive a much better service and it is much easier for us if you renew your subscription before the end of the year, rather than waiting until you realise something is missing in 1983. You are welcome to order NFFS Symposium Reports, FFn back numbers, etc, at the same time as renewing your subscription.

Also included with this edition is an order form for FFn Bulk Purchasing. With thoughts of approaching Christmas, this might be useful to plant within easy reach of wives or girlfriends.... We ask you to send Bulk Purchasing orders to David Stapleton and make cheques payable to FREE FLIGHT NEWS. Any bulk purchasing orders that are sent to the editorial address, for example with your subscription renewals, will be forwarded to David but at the price of an indeterminate delay within our system.

SMAE FIFTH AREA CENTRALISED EVENT - RESULTS September 5th

Open Power (Team, Keil Trophy + Plugge) 21 flew 3x180

1	J Hook	Crookham	+193	5	J Flynn	Liverpool	540+	10
2	T Payne	Biggles	+161	6	R Baggott	Birmingham	538	
3	J Bailey	Biggles	+ 92	7	P Harris	Birmingham	525	
4	A Peters	Birmingham	+ 28	8	S Godwin	Crookham	496	

Team Results :
1 Birmingham 1603 ; 2 Biggles A 1480 ; 3 Crookham 1450

Wakefield (Gutteridge) 21 flew 5x180

1	I Kaynes	Croydon	900 + 251	5	A Grantham	E Grinstead	822
2	D Greaves	Bristol & W	877	6	R Miller	Croydon	781
3	P Uden	Crookham	825	7	M Evatt	Biggles	710
4	R Peers	Falcons	823	8	R Uden	Crookham	705

A1 Glider 38 flew 5x120

1	G Madelin	Crookham	600 + 114	4=	J Carter	Falcons	539
2	R Woodruffe	Swindon	600 + 110	4=	P Hawkins	Biggles	539
3	J Cooper	Biggles	543	6	F Barter	RAFMAA	520

SMAE SIXTH AREA CENTRALISED EVENT - RESULTS September 26th

F1A (SMAE Cup) 9 flew 5x180

1	M Brown	Birmingham	641	3	M Gilmore	Grantham	317
2	C Parry	Biggles	599	4	K Smith	Croydon	270

Open Rubber (Team, Farrow Shield + Plugge) 25 flew 3x180

1	J Godden	Leeds	526	4	D Neil	Anglia	516
2	L Auckland	NYFFG	520	5	R Peers	Falcons	515
3	A Wells	Anglia	518	6	A Jack	Tynemouth	511

Team Results :
1 Anglia 1481 ; 2 Leeds 1457 ; 3 Falcons 1340

F1A Power 6 flew 5x120

1	P Harris	Birmingham	597	2	J Hopper	Free Birds	320

Plugge - final points

1 Biggles 1281 ; 2 Birmingham 972 ; 3 Grantham 945;
4 E Grinstead 808; 5 Crookham 715 ; 6 Bristol & West 627

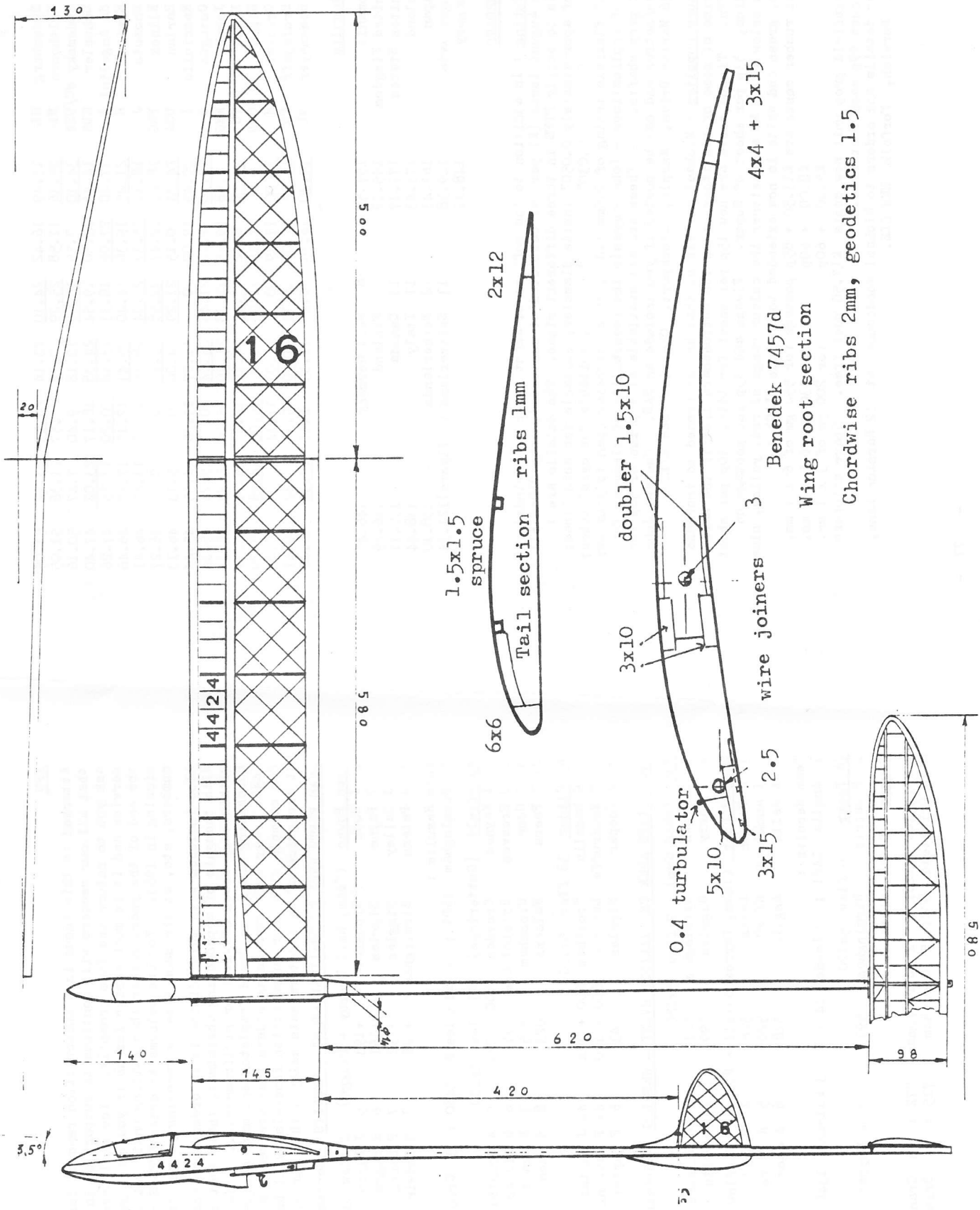

a.2 - 16

Scale 1 : 6

All dimensions mm

BY FABIO PONTANARI

Varese, Italy

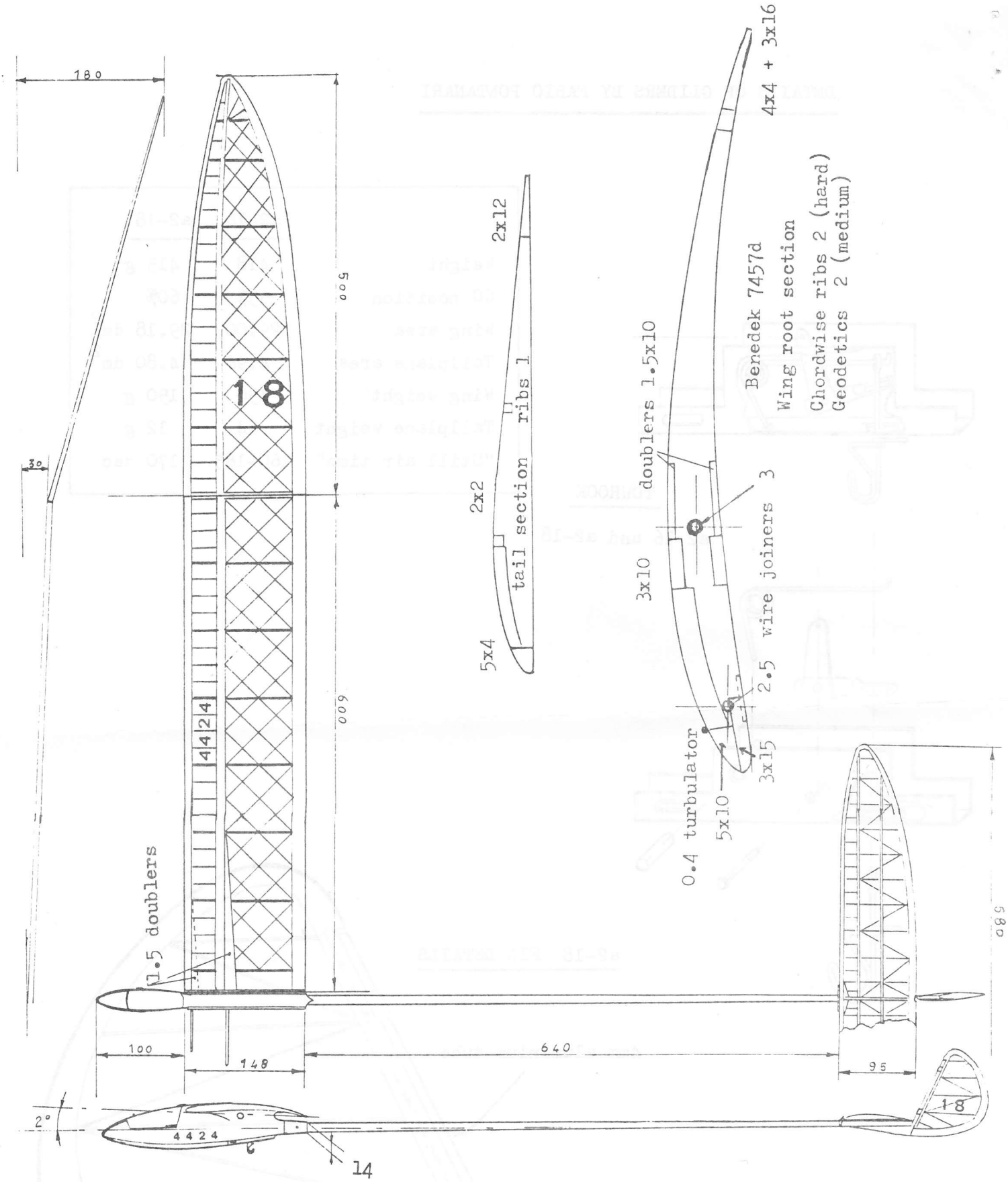

Scale 1 : 6

all dimensions mm

a.2 - 18

BY FABIO PONTANARI

Varese, Italy

DETAILS OF GLIDERS BY FABIO PONTANARI

	a2-16	a2-18
Weight	418	415 g
CG position	55%	60%
Wing area	29.00	29.18 dm^2
Tailplane area	4.96	4.80 dm^2
Wing weight	150	150 g
Tailplane weight	14	12 g
"Still air time"	160-165	170 sec

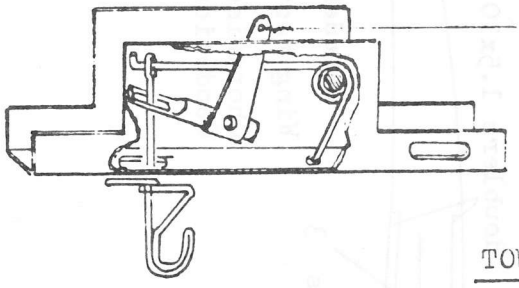

TOWHOOK

a2-16 and a2-18

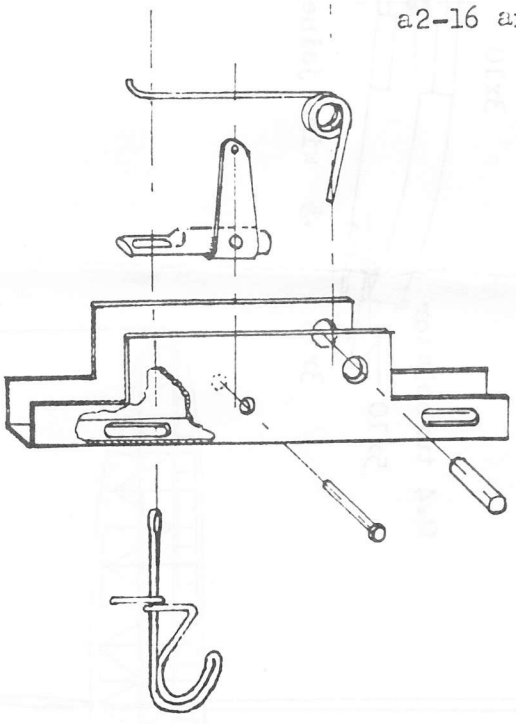
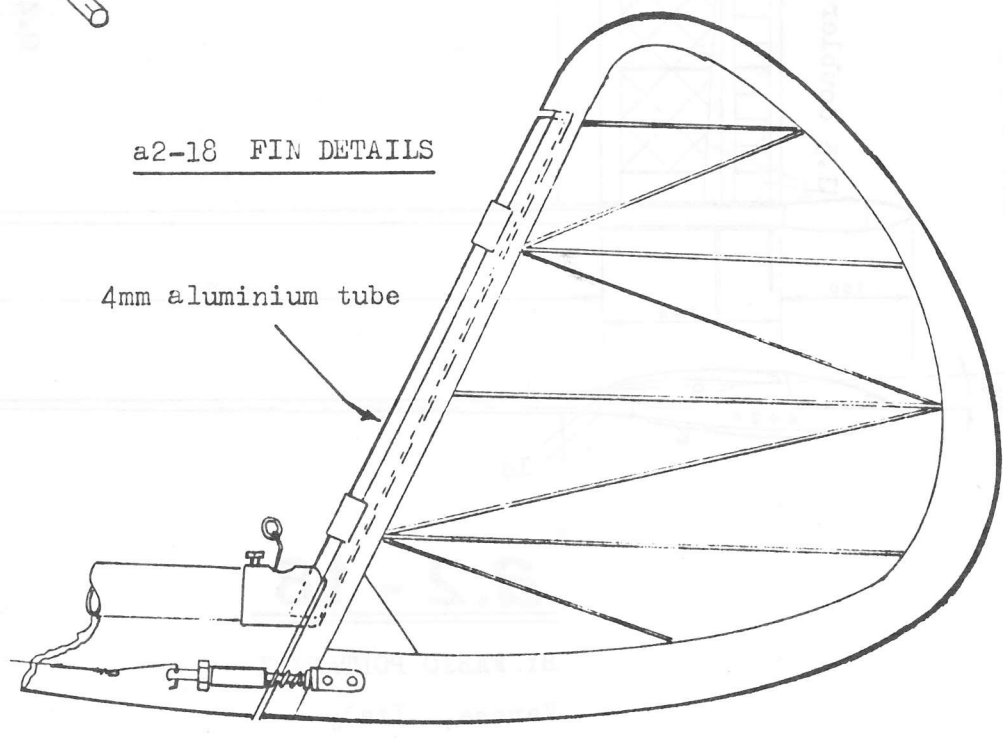
a2-18 FIN DETAILS